Quantitative methods for Regulatory layer selection

Ramprasad Yelchuru

Sigurd Skogestad

NTNU
Norwegian University of
Science and Technology

Outline

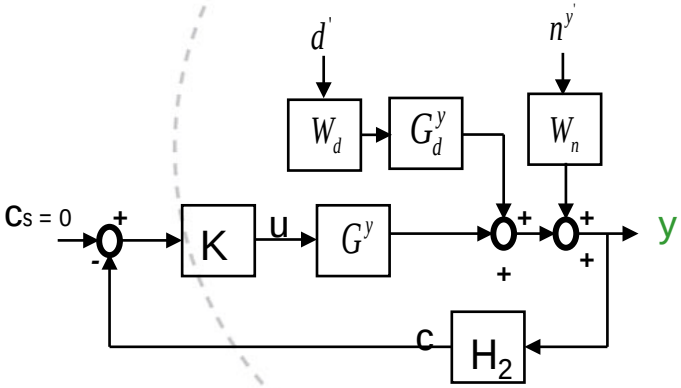

- Motivation
- Problem formulation
- Distillation column Case study
- Results

  4.1 CV_2 ($c = H_2y$) as individual measurements

  4.2 CV_2 ($c = H_2y$) as measurement combinations

5. Conclusions

CV_2 – controlled variable
y – measurements vector

NTNU
Norwegian University of
Science and Technology

Control system hierarchy for plantwide control

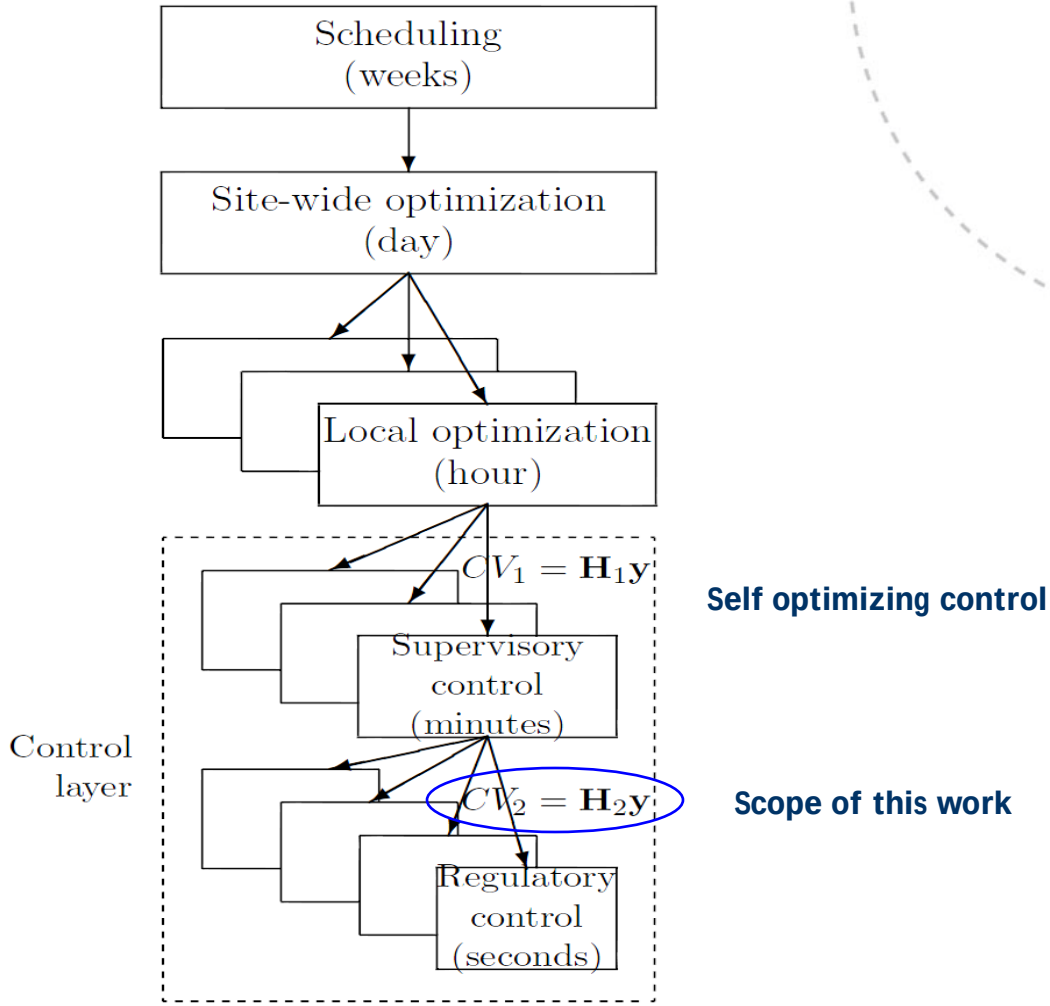

NTNU
Norwegian University of
Science and Technology

1. Motivation

Regulatory layer should

(1) facilitate stable operation
regulate the process
keep the plant in a linear operating region

(2) be simple

(3) avoid control loop reconfiguration

How to quantify ?

NTNU
Norwegian University of
Science and Technology

1. Motivation

(1) Minimize state drift by assuming perfect control c(jω)=0 and excluding stabilization

$$J(\omega) = \|Wx(j\omega)\|_2^2 \qquad W: \text{state weighting matrix}$$

(2) Simple: Close minimum number of loops

(3) Avoid control loop reconfiguration

Quantified the regulatory layer objectives

NTNU
Norwegian University of Science and Technology

1. Motivation

Typical frequency dependancy plot

with single closed loop with proportional control gain 'k' for a 2 x 2 MIMO system

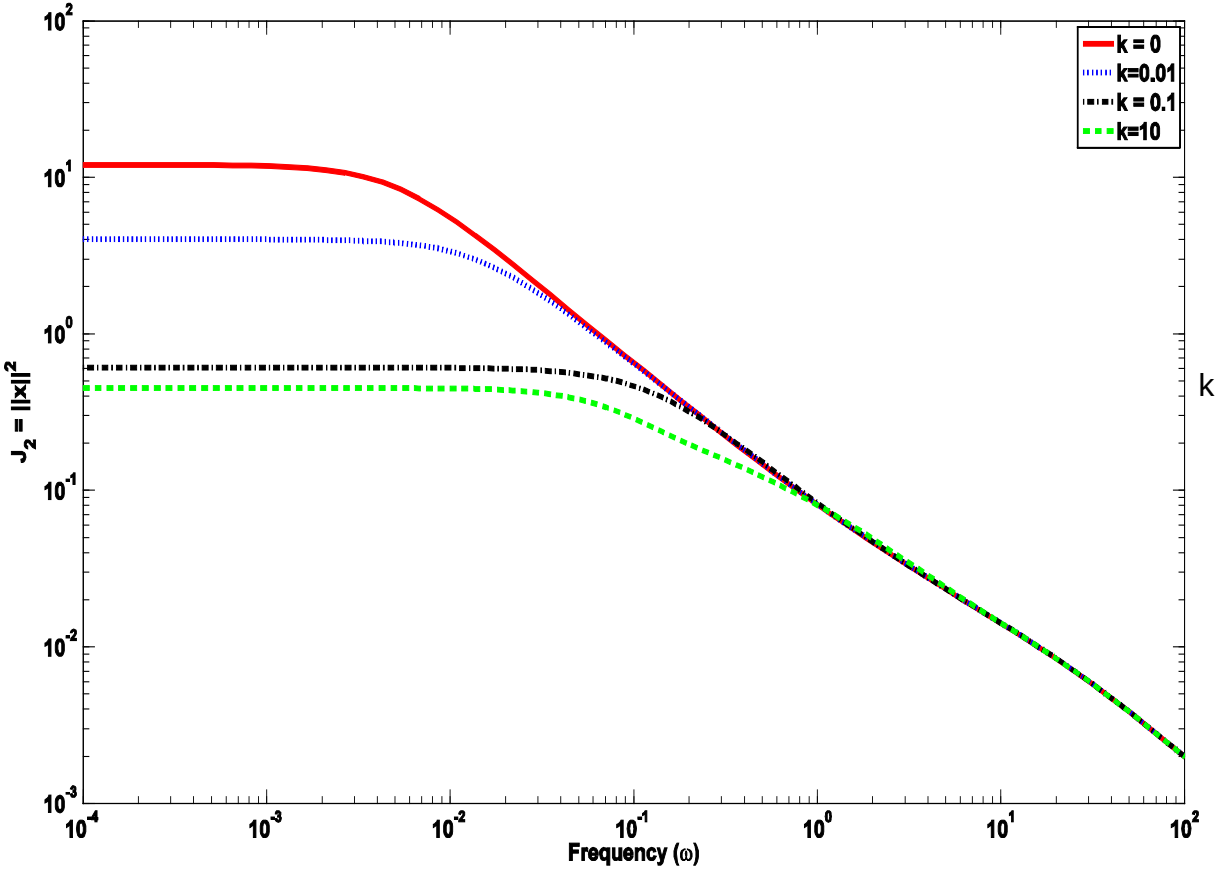

k = 0 :open loop
k = 10 :close to perfect control

Steady state based state drift is
fairly good over a frequency bandwidth

NTNU
Norwegian University of
Science and Technology

Outline

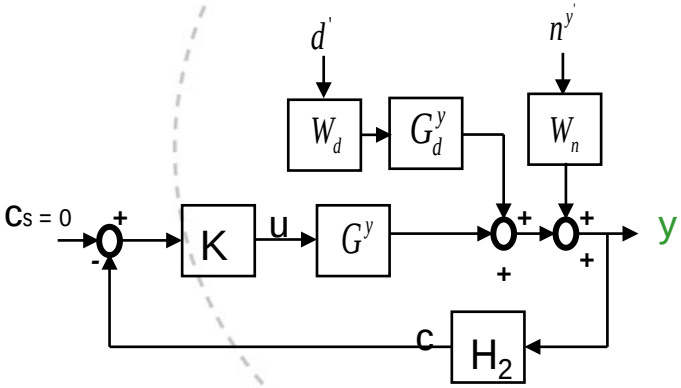

- Motivation
- Problem formulation
- Distillation column Case study
- Results

  4.1 CVs ($c = H_2y$) as individual measurements

  4.2 CVs ($c = H_2y$) as measurement combinations

5. Conclusions

CV_2 – controlled variable
y – measurements vector

NTNU
Norwegian University of
Science and Technology

2. Problem Formulation

$$L = J - J_{opt}(u_{opt}, d)$$
$$= \|Wx\|_2^2 - \|Wx_{opt}(d)\|_2^2$$

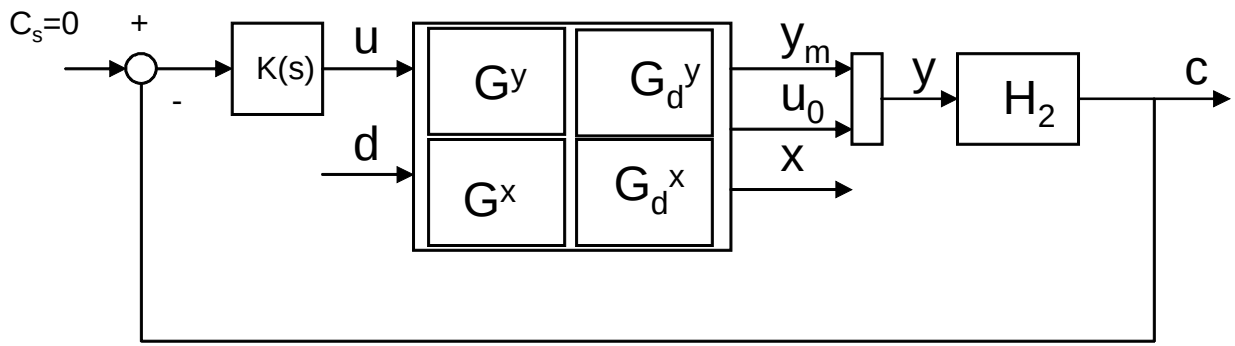

$$L_{avg} = \left\| J_{2_{uu}}^{1/2} (H_2 G^y)^{-1} H_2 Y_2 \right\|_F^2$$

Loss is due to
(i) Varying disturbances
(ii) Implementation error in controlling c at set point c_s

$$Y_2 = [(G^y J_{2_{uu}}^{-1} J_{2_{ud}} - G_d^y) W_d \quad W_n]$$
$$= [F_2 W_d \quad W_n]$$

$$F_2 = \frac{\partial y^{opt}}{\partial d}$$

Ref: Halvorsen et al. I&ECR, 2003
Kariwala et al. I&ECR, 2008

NTNU
Norwegian University of Science and Technology

2. Problem : Convex formulation

$$\min_{H_2} \left\| J_{2_{uu}}^{1/2} (H_2 G^y)^{-1} H_2 Y_2 \right\|_F$$

Non-convex optimization problem

D : any non-singular matrix

$$H_{2_1} = DH_2$$

$$H_2(G_y)^{-1}H_2 = (H_2G_y)^{-1}D^{-1}DH_2 = (DH_2G_y)^{-1}DH_2 = (H_{2_1}G_y)^{-1}H_{2_1}$$

We use D to make $H_2 G^y = J_{uu}^{1/2}$

$$\min_{H_2} \left\| H_2 Y_2 \right\|_F$$

subject to $H_2 G^y = J_{2_{uu}}^{1/2}$

Convex optimization problem

Global solution

Problem is convex in decision matrix H_2

NTNU
Norwegian University of Science and Technology

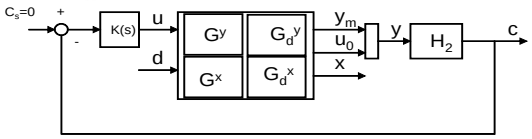

2. Problem formulation

$$c = H_2[y_m \quad u_0]$$

n_{ym} number of y_m
n_{u0} number of physical valves
n_c = number of CVs $=n_u$

Example

n_{ym} =4
n_{u0} =4
n_c = 2=n_u

$$H_2 = \left[\overbrace{h_{1,1}\, h_{1,2} \cdots h_{1,4}}^{H_y} \; \overbrace{h_{1,5}\, h_{1,6} \cdots h_{1,8}}^{H_u} \atop h_{2,1} h_{2,2} \cdots h_{2,4} \; h_{2,5} h_{2,6} \cdots h_{2,8} \right]$$

P1. Close 0 loops : Select (n_c variables from u_0) or (0 variables from y_m) $\Rightarrow$ Pick n_c columns in H_u

P2. Close 1 loops : Select 1 variables from y_m $\Rightarrow$ Pick 1 column in H_y and n_c -1 columns in H_u

P3. Close 2 loops : Select 2 variables from y_m $\Rightarrow$ Pick 2 columns in H_y and n_c -2 columns in H_u

P4. Close k loops : Select k variables from y_m $\Rightarrow$ Pick k columns in H_y and n_c -k columns in H_u

P5. Close n_c loops : Select n_c variables from y_m $\Rightarrow$ Pick n_c columns in H_y and 0 columns in H_u

NTNU
Norwegian University of Science and Technology

2. Solution approach

$$H_2 = \begin{array}{c} \begin{array}{cccc} \sigma_1 & \sigma_2 & \cdots & \sigma_{ny} \end{array} \\ \begin{bmatrix} x_1 & x_2 & \cdots & x_{ny} \\ x_{ny+1} & x_{ny+2} & \cdots & x_{2*ny} \\ \vdots & \vdots & \ddots & \vdots \\ x_{(nc-1)*ny+1} & x_{(nc-1)*ny+2} & \cdots & x_{nc*ny} \end{bmatrix}_{nu \times ny} \end{array}$$

$$\sigma_i \in \{0,1\}$$
$$\forall i = 1, 2, \cdots, n_y$$

$$X_\delta = \begin{bmatrix} x_1 \\ x_2 \\ \vdots \\ x_{nu*ny} \end{bmatrix}_{(nu*ny)\times 1} \qquad \sigma_\delta = \begin{bmatrix} \sigma_1 \\ \sigma_2 \\ \vdots \\ \sigma_{n_y} \end{bmatrix}_{n_y \times 1}$$

$$\min_{x_\delta, \sigma_\delta} \quad \left(x_\delta^T F x_\delta \right)$$

$$st. \quad G_\delta^{y^T} x_\delta = j_\delta$$

$$\mathbf{P}\sigma_\delta = n$$

$$F = Y_\delta Y_\delta^T$$

$$\mathbf{P} = ones(1, ny)$$

$$upper\ bound\ \ for\ M = \max(J_\delta) / \min(G^y)$$

Big M approach

$$\begin{bmatrix} -M \\ -M \\ \vdots \\ -M \end{bmatrix} \sigma_i \le \begin{bmatrix} x_i \\ x_{ny+i} \\ \vdots \\ x_{(nu-1)*ny+i} \end{bmatrix} \le \begin{bmatrix} M \\ M \\ \vdots \\ M \end{bmatrix} \sigma_i$$

$$\sigma_i \in \{0,1\}$$

$$\forall i = 1, 2, \cdots, n_y$$

We solve this MIQP for n = n_u to n_y

P, n are modified to fit our requirement

NTNU
Norwegian University of
Science and Technology

Outline

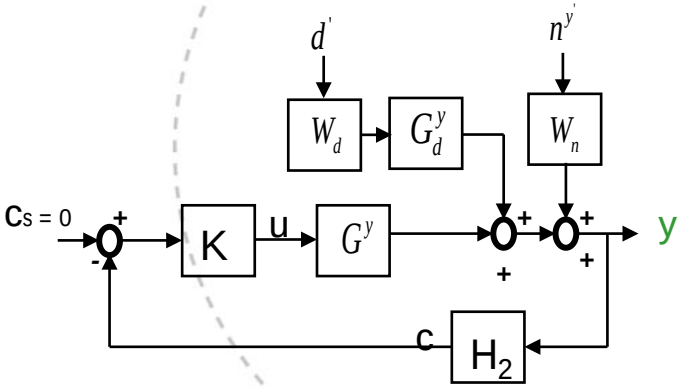

- Motivation
- Problem formulation
- Distillation column Case study
- Results

  4.1 CVs ($c = H_2y$) as individual measurements

  4.2 CVs ($c = H_2y$) as measurement combinations

5. Conclusions

CV_2 – controlled variable
y – measurements vector

NTNU
Norwegian University of
Science and Technology

3. Case Study : Distillation Column

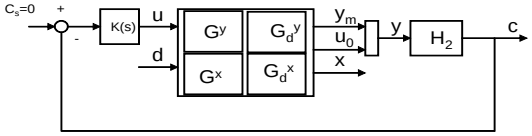

Binary Distillation Column
Shown : LV configuration

41 Trays

Level loops closed with D,B

2 MVs – L,V
41 Measurements – $T_1, T_2, T_3, \ldots, T_{41}$
3 DVs – F, ZF, qF

*Compositions are indirectly controlled by controlling the tray temperatures

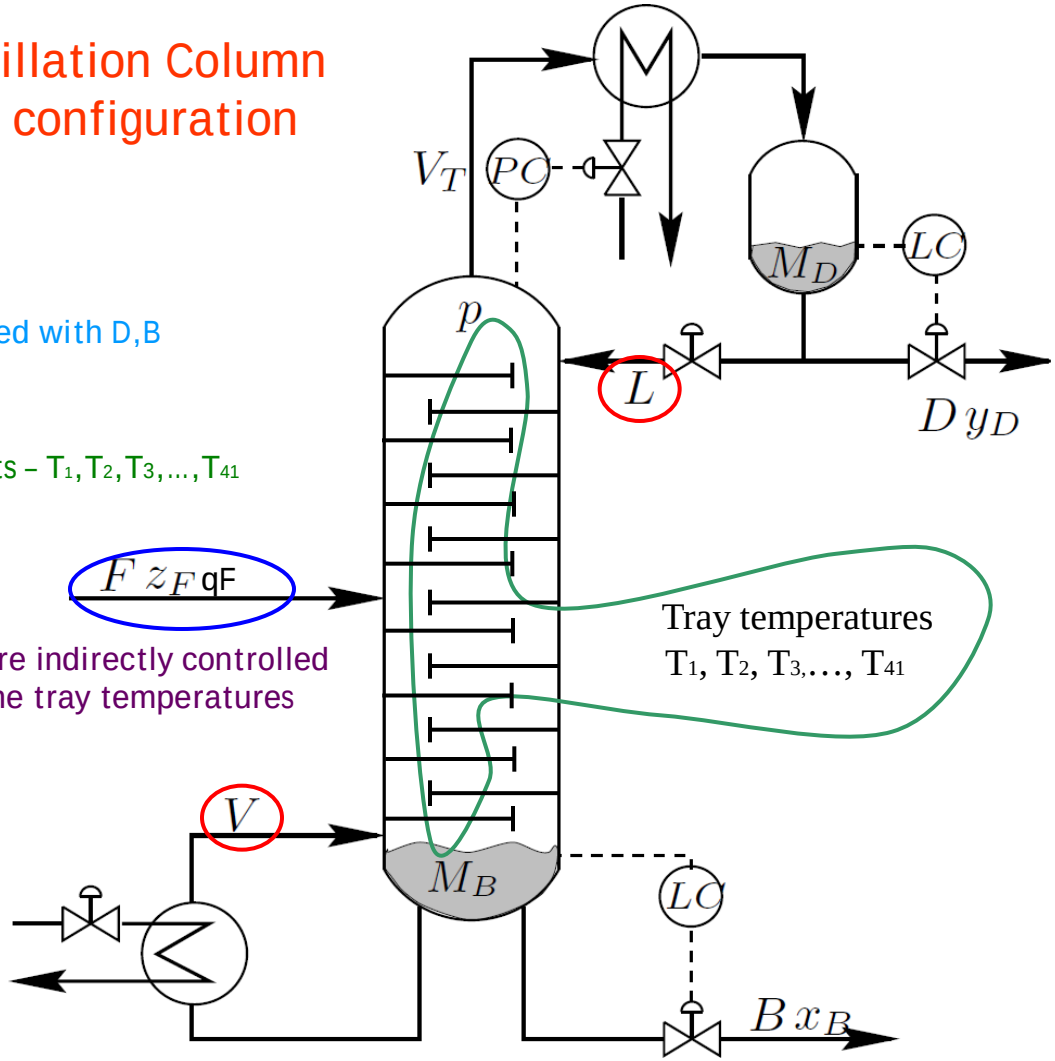

$$u = \begin{pmatrix} L \\ V \end{pmatrix} \qquad u_0 = \begin{pmatrix} L \\ V \\ D \\ B \end{pmatrix}$$

$$J = \|Wx\|_2^2$$

NTNU
Norwegian University of Science and Technology

3. Case Study : Distillation Column

$$L_{avg} = \left\| J_{2_{uu}}^{1/2} (H_2 G^y)^{-1} H_2 Y_2 \right\|_F^2 \qquad Y_2 = [(G^y J_{2_{uu}}^{-1} J_{2_{ud}} - G_d^y) W_d \quad W_n]$$

Data

$$G^y \in \mathbb{R}^{41\times 2}; G_d^y \in \mathbb{R}^{41\times 3}; J_{2_{uu}} \in S_+^2; J_{2_{ud}} \in \mathbb{R}^{2\times 3}; W_d \in \mathbb{R}^{3\times 3}; W_n \in \mathbb{R}^{41\times 41}$$

$$G^y = \begin{bmatrix} 10.83 & -10.96 \\ 15.36 & -15.55 \\ \vdots & \vdots \\ 13.01 & -12.81 \\ 8.76 & -8.62 \end{bmatrix}; G_d^y = \begin{bmatrix} 5.85 & 11.17 & 10.90 \\ 8.30 & 15.86 & 15.47 \\ \vdots & \vdots & \vdots \\ 5.85 & 13.10 & 12.90 \\ 3.94 & 8.82 & 8.68 \end{bmatrix}$$

$$W_d = \begin{bmatrix} 0.2 & 0 & 0 \\ 0 & 0.1 & 0 \\ 0 & 0 & 0.1 \end{bmatrix}; Wn = diag(0.5 * ones(41,1))$$

NTNU
Norwegian University of
Science and Technology

Outline

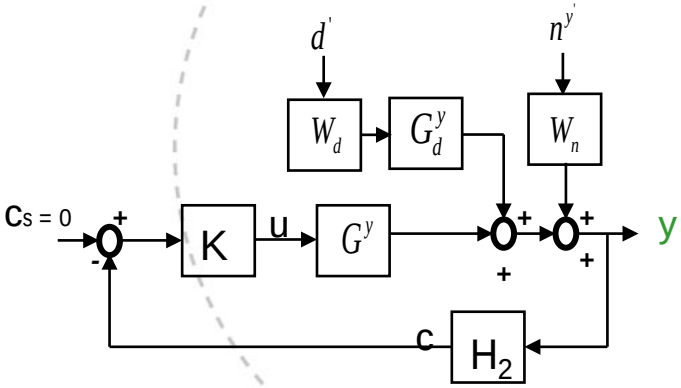

- Motivation
- Problem formulation
- Distillation column Case study
- Results

  4.1 CVs ($c = H_2 y$) as individual measurements

  4.2 CVs ($c = H_2 y$) as measurement combinations

5. Conclusions

CV_2 – controlled variable
y – measurements vector

NTNU
Norwegian University of
Science and Technology

4. Results

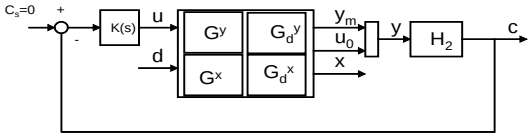

4.1 CVs ($c = H_2 y$) as individual measurements

$$c = H_2 [y_m \quad u_0]$$

n_{ym} number of y_m
n_{u0} number of physical valves
n_c = number of CVs $= n_u$

$n_{ym} = 41$
$n_{u0} = 4$
$n_c = 2 = n_u$

$$H_2 = \begin{bmatrix} \overbrace{h_{1,1}\ h_{1,2} \cdots h_{1,41}}^{H_y} & \overbrace{h_{1,42}\ h_{1,43}\ h_{1,44}\ h_{1,45}}^{H_u} \\ h_{2,1} h_{2,2} \cdots h_{2,41} & h_{2,42}\ h_{2,43}\ h_{2,44}\ h_{2,45} \end{bmatrix}$$

P1. Close 0 loops : Select (2 variables from u_0)
or (0 variables from y_m) $\Rightarrow$ Pick 2 columns in H_u

P2. Close 1 loops : Select 1 variables from y_m $\Rightarrow$ Pick 1 column in H_y and 1 column in H_u

P3. Close 2 loops : Select 2 variables from y_m $\Rightarrow$ Pick 2 columns in H_y and 0 column in H_u

NTNU
Norwegian University of
Science and Technology

4.1 cv_2 ($c = H_2y$) as individual measurements

Table 1: Distillation Column case study: The self optimizing variables $\mathbf{c}'s$ as individual measurements

No. of loops closed*	$\mathbf{c}'s$	Loss $(J - J_{opt}(\mathbf{d}))$ $\frac{1}{2}\|\mathbf{M}_2\|_F^2$	Cost $J = \|\mathbf{Wx}\|_2^2$ Expected value
0	$[\mathbf{V} \quad \mathbf{B}]$	**109.669**	109.690
0	$[L \quad B]$	109.738	109.759
0	$[V \quad D]$	110.506	110.527
0	$[L \quad D]$	110.513	110.534
0	$[L \quad V]$	954.472	954.493
0	$[D \quad B]$	∞	∞
1	$[\mathbf{T_{18}} \quad \mathbf{L}]$	**0.188**	0.209
1	$[T_{18} \quad V]$	0.259	0.280
2	$[\mathbf{T_{15}} \quad \mathbf{T_{27}}]$	**0.026**	**0.047**

NTNU
Norwegian University of Science and Technology

* In addition to two level loops

Distillation column : 1 loop closed (T_{18}) + L constant

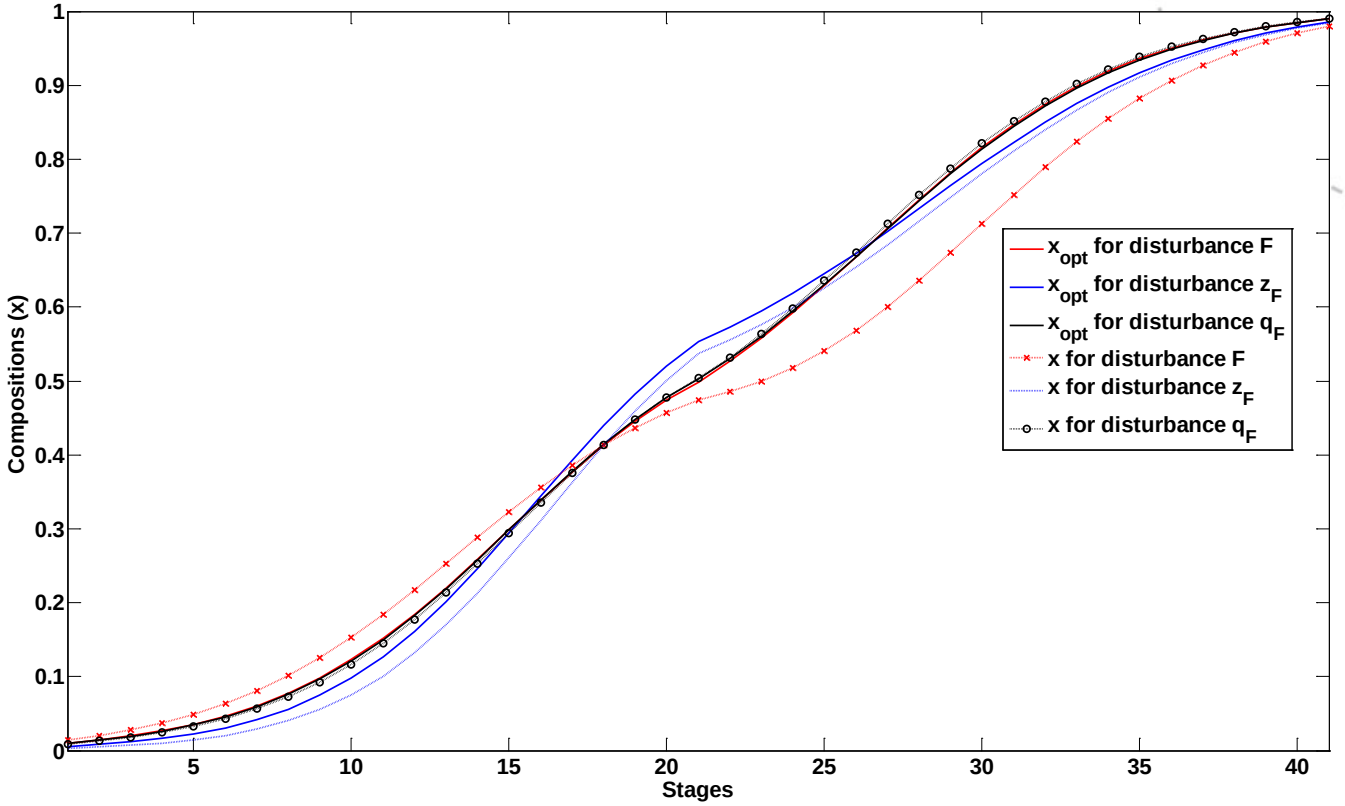

NTNU
Norwegian University of
Science and Technology

Distillation column : 1 loop closed (T18) + L constant

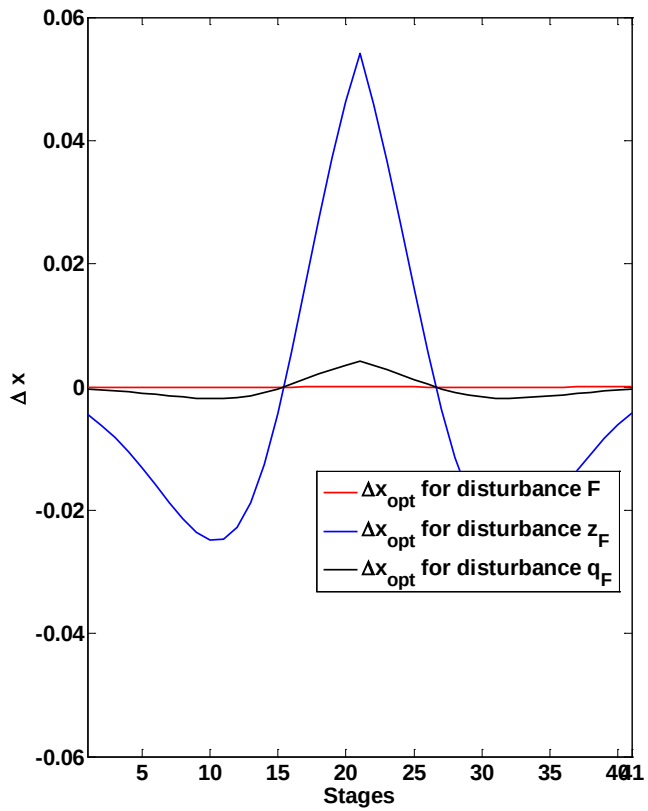

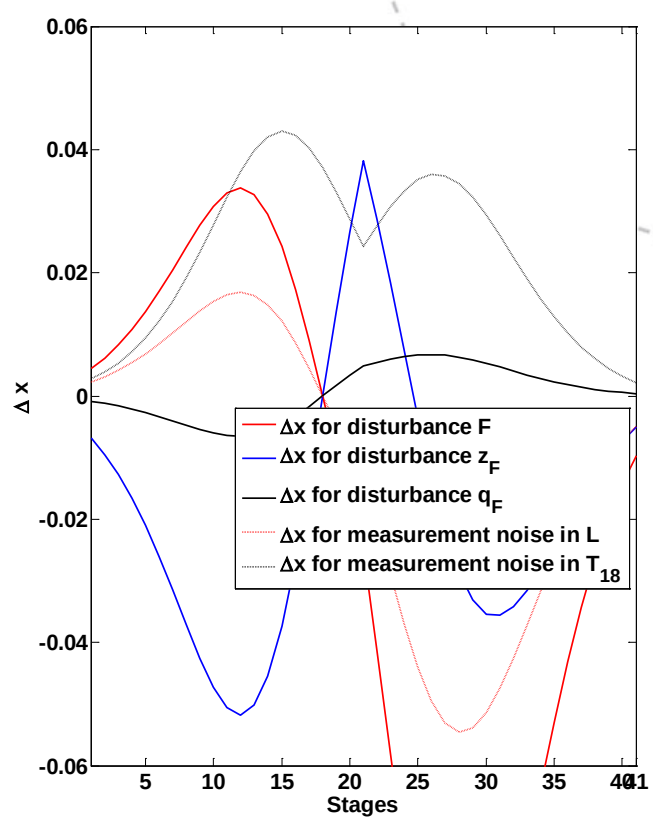

NTNU
Norwegian University of
Science and Technology

Distillation column : 2 loops closed (T_{15},T_{27})

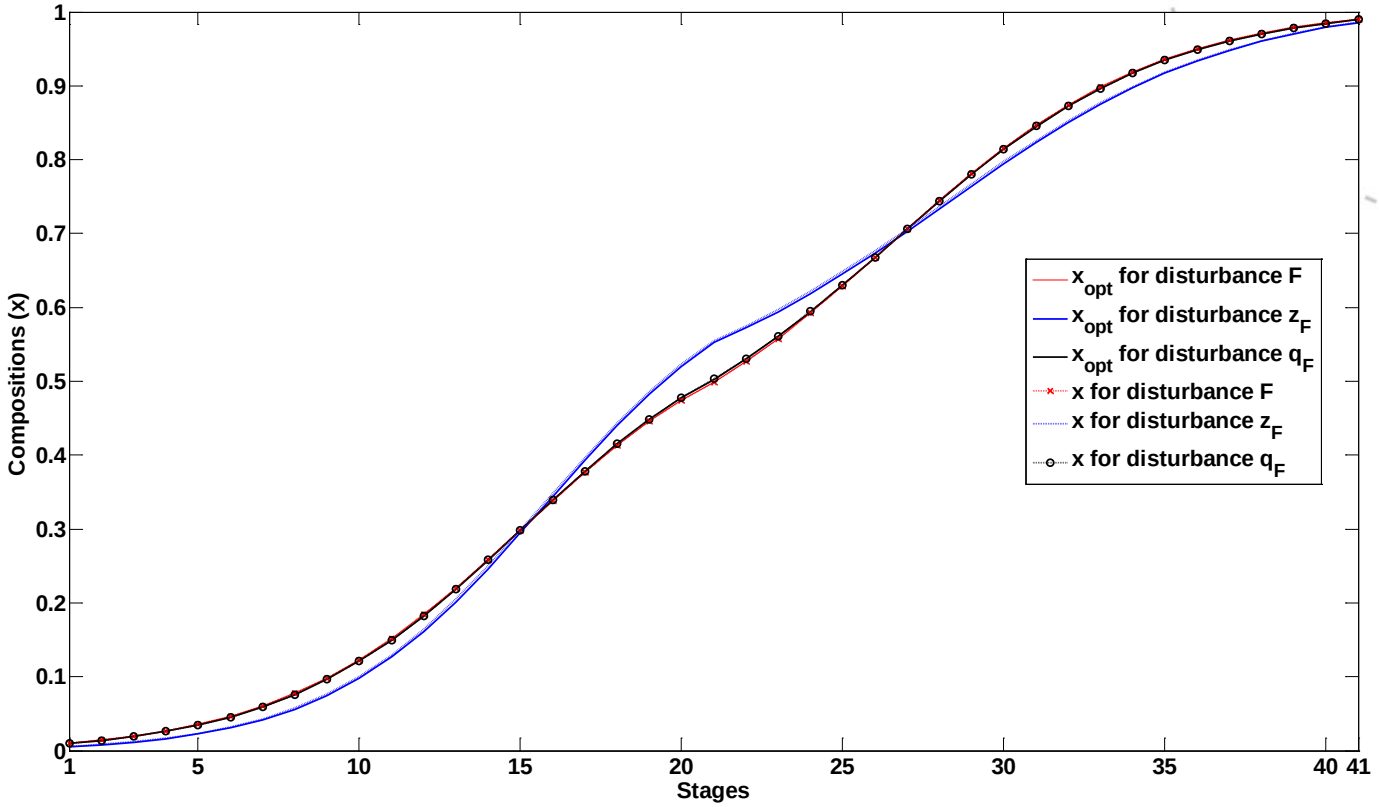

NTNU
Norwegian University of
Science and Technology

Distillation column : 2 loops closed (T_{15},T_{27})

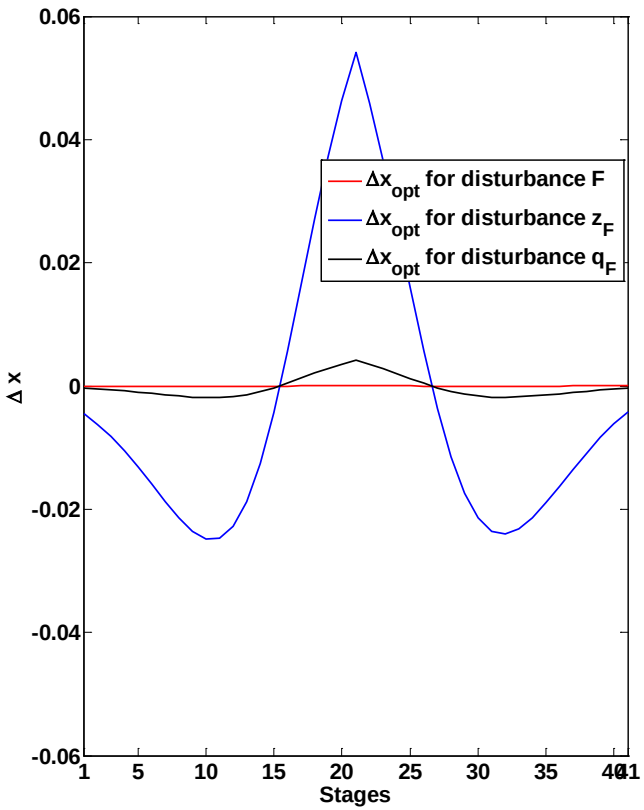

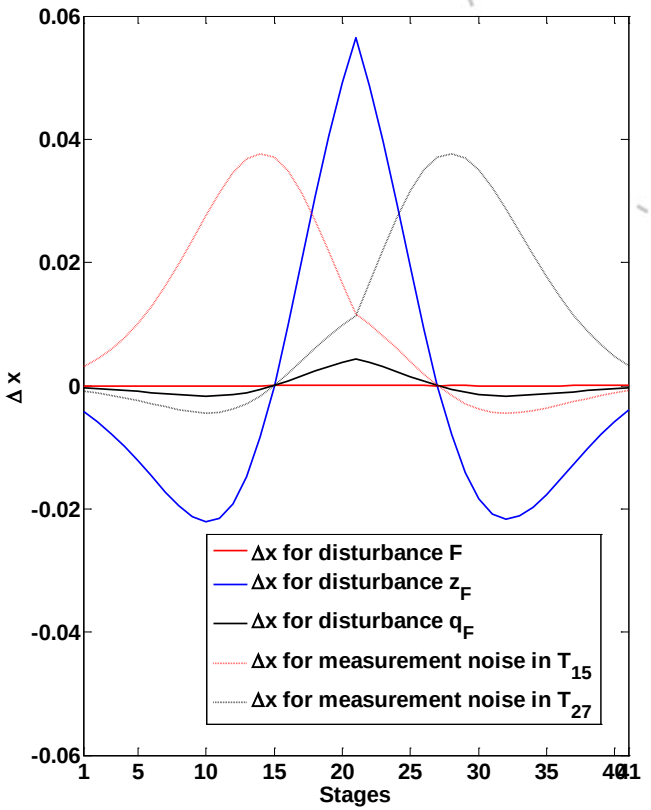

NTNU
Norwegian University of
Science and Technology

4.2 CV_2 ($c = H_2y$) as combinations of measurements

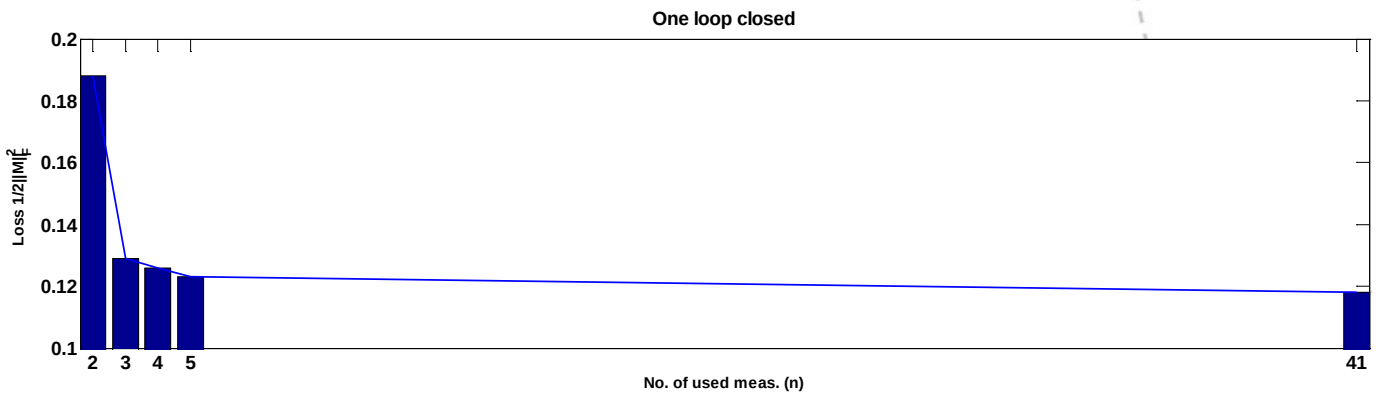

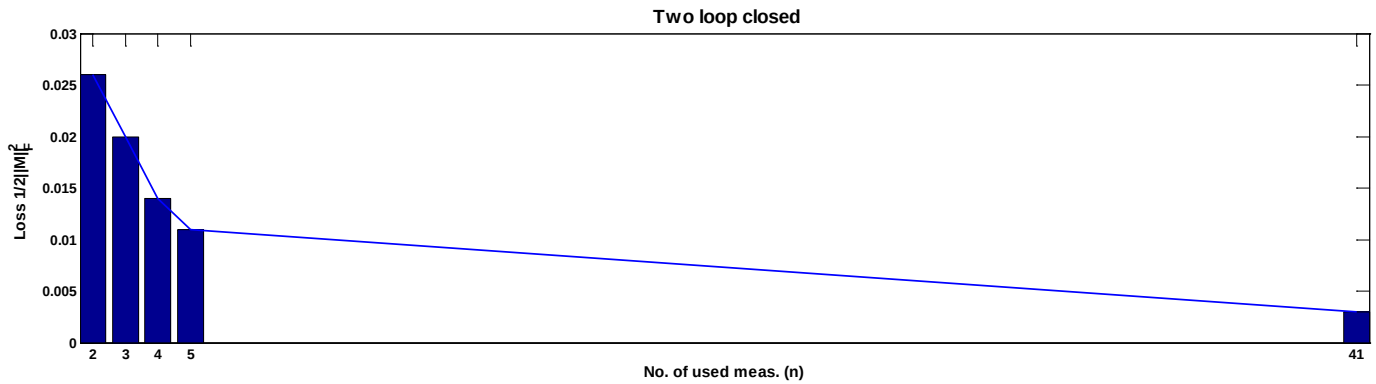

NTNU
Norwegian University of
Science and Technology

5. Conclusions

- Quantified the regulatory layer objectives using state drift criterion
- Extended the economic self-optimizing control concepts to state drift minimization in regulatory layer
- We showed that state drift minimization at steady-state is sufficient for distillation case study
- Regulatory layer control variables (CV_2) as individual measurements or measurement combinations are selected to minimize the state drift
- Optimal regulatory layer with 1,2 or more closed loops is obtained, to arrive at minimum regulatory layer with acceptable loss.

NTNU
Norwegian University of
Science and Technology